Specifications

Number of Dimmers:	1 IGBT Intelligent Dimmer	Ambient Temperature:	0° to 50° C
Max Output Voltage:	120 VAC	Relative Humidity:	5% to 95%, non condensing
Min./Max Dimmer Load:	Min. 1 Watt, Max. 750 or 1200 Watts*	Cooling Method:	Natural Convection
Transition Time:	450 or 800 microseconds (user selectable)	Height:	6.82”
Insertion Loss:	Max. 1.5 Volts (2%)	Width:	4.53”
Supply:	120 Volts AC, 6.5A or 10A per module*	Depth:	2.93” (750 Watt) 3.18” (1200 Watt)
Frequency:	50 / 60 Hz	Weight:	2.0 lbs.
Control Connections:	USITT DMX512/1990 In (D5M) / Out/Thru (D5F)	Power In Feed:	36” Pigtail provided from module is 3-#14 AWG
Circuit Protection:	Internal Short Circuit & Thermal Protection	Power Out Feed:	18” Pigtail provided from module is 3-#14 AWG
Load Control:	Any dimmable load - incandescent, fluores-cent, or general inductive (FPC only)	DMX512 Data Link Load	Represent 1/4 ETA 485 Unit Load

** Depends on model*

c UL us

3 YEAR LIMITED WARRANTY

Entertainment Technology warrants that this product will be free from defects in workmanship or materials. This warranty is void on any electronic controls which have been overloaded, abused, improperly installed or altered in any manner.

Entertainment Technology’s sole obligation will be at its option to repair or replace any electronic controls product proven defective if it is returned, postage prepaid, to Entertainment Technology, 10911 Petal St. Dallas, Texas 75238. Entertainment Technology will not pay for any charge-back or charge for labor or material that does not have its prior written approval.

This warranty shall be in lieu of any other warranty, express or implied, including but not limited to any implied warranty of merchantability or fitness for a particular purpose. Some states do not allow limitations on how long an implied warranty lasts and do not allow the exclusion or limitation of incidental or consequential damages, so the above limitation or exclusions may not apply to you. This warranty gives you specific legal rights, and you may also have other rights, which vary from state to state.

Exchange of products covered by warranty should be handled through your original supply source.
Bak Pak™ Installation and Operation Guide | Document Number: 85-1393B | Version as of 20-Feb-2004

This product may be covered by one or more of the following U.S. Patents: #4,413,211; 4,430,576; 4,465,956; 4,733,138; 4,792,731; 4,880,950; 4,988,840; 4,992,709; 5,004,969; 5,128,654; 5,153,816; 5,189,259; 5,194,858; 5,239,255; 5,371,439; 5,371,444; 5,636,111; 5,642,104; 5,646,490; Des. 307,578; Des. 333,124; License 4,482,844 and corresponding foreign patents. Other Utility, Design and Foreign Patents Pending.

We reserve the right to change details of design, materials and finish in any way that will not alter the installed appearance or reduce function performance.

Entertainment Technology
A Genlyte-Thomas Company
10911 Petal Street
Dallas, Texas 75238 USA

For technical/sales assistance call:
1-800-223-9477
www.etdimming.com
Made in USA ©2003 Entertainment Technology

Intelligent Power System® Series

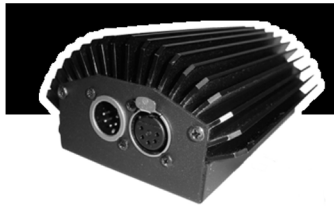

BAK PAK™

IGBT DIMMING MODULE

iGBT INTELLIGENCE

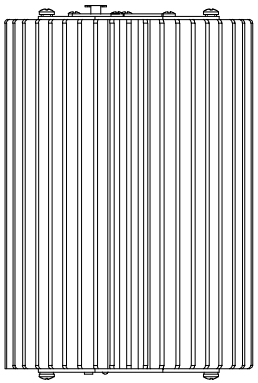

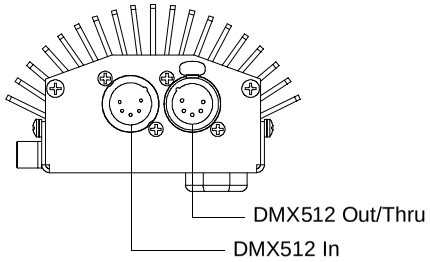

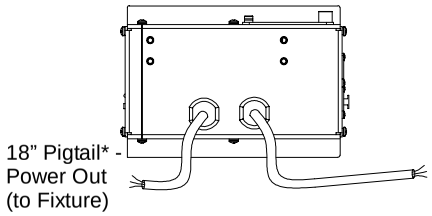

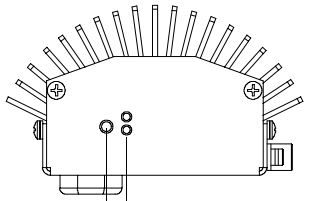

* Pre-installed connector is optional.

Congratulations on your purchase of the Bak Pak™ IGBT dimming module. The Intelligent Power System® Series of modules provide dimming capability to conventional lighting fixtures. Please take a few moments to thoroughly read this guide, which includes important safety, installation and operation information.

Bak Pak™ IGBT dimming modules are available in 750 and 1200 watt versions. This installation and operation guide covers both types.

Part No. 85-1393B

INSTALLATION AND OPERATION GUIDE

Bak Pak™ is a trademark of Genlyte Thomas Group LLC
For more information visit: www.etdimming.com

Entertainment Technology
GENLYTE THOMAS

Important Safety Instructions

⚠ Observe the following precautions when installing, operating or servicing the product:

- Disconnect power before servicing.
- Install in dry locations only.
- DO NOT power module from a dimmed source. Connect to standard power or mechanical relay ONLY.
- Use the included safety cable for ALL installations.
- If installing any other type of mounting hardware or bracket, DO NOT use screws longer than 1/4" in length. Longer screws WILL damage interior electrical components.
- Save these instructions for future reference.

About the Bak Pak™ Dimming Module

The Bak Pak™ dimming module provides the performance and energy-efficient advantages of Intelligent Power System® (IPS) dimmer technology in a compact, light-weight design. Like other products in the IPS series, the Bak Pak module utilizes state-of-the art Insulated Gate Bipolar Transistor (IGBT) technology, which provides significant performance enhancements over other conventional dimming equipment. IPS dimmers are completely solid-state, enabling silent operation at 800 microseconds in either forward or reverse phase control, which minimizes lamp, ballast and transformer noise. The Bak Pak module supports LOW HARM™ mode, which controls harmonic neutral currents for extremely quiet operation and low neutral harmonics. As well, every IPS dimmer has an on-board intelligent microprocessor, which adjusts and maintains proper voltage and current in response to changes detected in the load and electrical service. The microprocessor automatically suppresses surges, protects against dead shorts, and extends lamp life.

The 750 watt and 1200 watt versions can be easily identified by the label applied to the underside of the module *or* the label next to the Focus button.

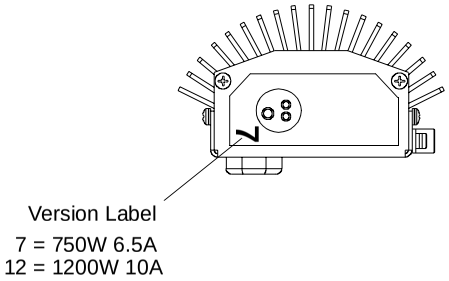

Operation

The Bak Pak module provides two LED status indicators and a Focus button.

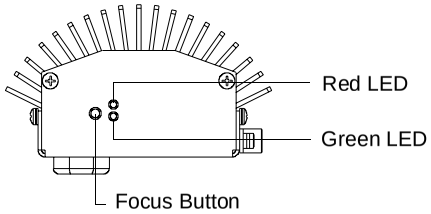

The **LED indicators** report operating conditions as follows:

Red LED	Green LED	Condition
Off	Off	Normal
Off	Flashing	No Load
Off	On	Focus Mode (controlled at dimmer)
Flashing (1.5 sec on, .5 off)	Off	Oversized Load or Overload
Flashing (.5 sec on, .5 off)	Off	Over Temperature
On	Off	No communications
Flashing	Flashing	Over Voltage
On	On	No Communications / In Focus Mode

The **Focus button** can be used to quickly set the output level or test the module.

- If the module is off, a tap on the button will take it to full on.
- If the module is on, a tap will turn it off.
- Whether on or off, pressing and holding the button will ramp up the intensity level. Releasing the button will hold the setting at an intermediate level.

Fixtures turned on in this fashion will remain on until a control console or (Raceway control module) sets a non-zero level for the module. The module's level setting will be cancelled and it will now follow console control. If the module is already set to a non-zero level by the console (or RCM), the button becomes a "Flash-to-Full" control, overriding the level only while the button is pressed.

Additional Resources

For more information regarding DMX512 systems, refer to the DMX512/1990 & AMX 192 Standards publication available from United States Institute for Theatre Technology, Inc. (USITT).

USITT
6443 Ridings Road
Syracuse, NY 13206-1111 USA
1-800-93USITT
www.usitt.org

Effects

When set to 7XX, the rotary DIP switch settings can be used to create simple effects without DMX control. Effect parameters can be set as follows:

Dial Settings	Effect	Description
70X - where X is ramp time	Bounce Up	ramp up, instant off (100% intensity)
71X - where X is ramp time	Bounce Down	instant on, ramp down (100% intensity)
72X - where X is ramp time	Saw Tooth	ramps up, ramps down
73X - where X is toggle time	Bump	50% on/off toggle
74X - where X is time off	Blink On	12% on, 88% off
75X - where X is time on	Blink Off	12% off, 88% on
76X - where X is speed	Strobe	variable speed strobe
77X - where X is lamp intensity	Flame Flicker	random flicker and intensity
78X - where X is rate	Bell Curve	ramps up, holds, ramps down
79X	*for future use*	n/a

Intelligent Effects Network

Effects can be synchronized across a network of Bak Pak modules to create chase, runway and wave sequences. For this purpose, eight unique phase shifts are output from the first module in the data link, transmitting on DMX512 addresses 002-008. To utilize this feature, an Intelligent Effects Network Coupler (ET Part No. IPSBPC) will be required at the first module in the link.

To create effects using the Intelligent Effects Network, do the following:

Step 1. Using data cables, connect Bak Pak modules as shown below. At first module data input, install Intelligent Effects Network Coupler. At first and last module, install termination plug (ET Part No. IPSDMXT).

Step 2. The first Bak Pak module's address (slot) will automatically be considered as 001. Set subsequent module addresses to any number between 002 and 008. These can be in numerical order or out of sequence. The address setting will determine the delay and execution order of the effect at that particular module.

Step 3. At first module, using rotary dials, set to desired effect (7XX).

Step 4. Apply power. Effect will execute across network.

Step 5. Adjust address settings to vary effect execution as required.

Intelligent Effects Network - Up to 64 Bak Pak Modules

	001	002	003	004	005	006	007	008
Example Address Settings	001	008	002	007	003	006	004	005
	001	003	005	007	002	004	006	008

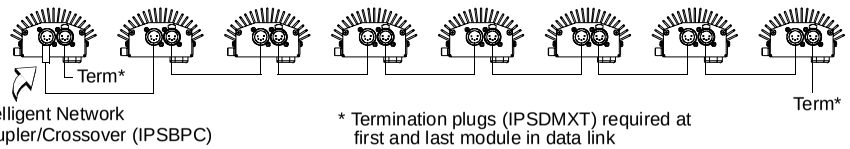

Installation

The Bak Pak module can be mounted in a variety of configurations. Depending on your requirements, choose one of the methods shown below. The Bak Pak module can be mounted vertically (recommended) or horizontally as required, however, to allow for optimum convection cooling, the module cannot be mounted with the heatsink fins downward.

CAUTION: A safety cable is supplied with the Yoke and Pipe mounts. The safety cable must be secured to the fixture or structure and may be required by local codes.

Yoke Mount (IPSBPYOKEMT) **

Step 1. Attach yoke-mount bracket to Bak Pak module (as required).

Step 2. Fit bracket onto fixture yoke.

Step 3. Tighten threaded attachment knob to secure in place.

Step 4. Attach safety cable.

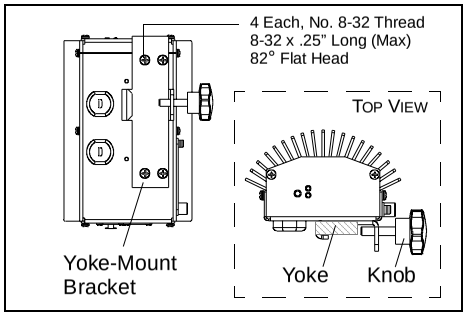

Wall Mount (IPSBPWALLMT) **

Step 1. Attach wall-mount bracket to Bak Pak module (as required).

Step 2. At wall, locate suitable installation position.

Step 3. Using Bak Pak mounting bracket as template, mark holes for drilling.

Step 4. Drill mounting holes and secure Bak Pak module to wall.

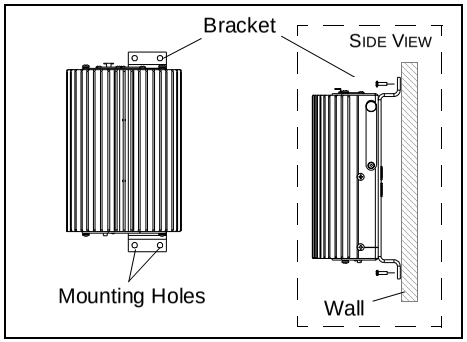

Pipe Mount (IPSBPPIPEMT) **

Step 1. Attach threaded knob or C-clamp (not supplied) to Bak Pak mounting bracket (as required).

Step 2. Fit bracket over pipe*.

Step 3. Tighten knob (or clamp) to secure in place.

Step 4. Attach safety cable.

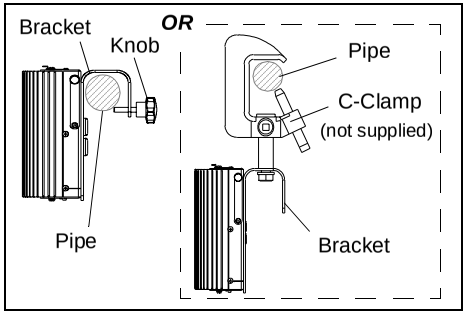

* Mounts to 1.5" schedule 40 pipe *or* 2" aluminum tube truss.

** Installation of mounting bracket must be done using the (4) supplied screws. Using other screws can result in damage to the unit. Supplied screws are 8-32 x .25" long (max) 82° flat head.

Connecting Power

The Bak Pak module is supplied with two pigtail type cables. In the event your module did not come pre-configured with power connectors, install connectors meeting your requirements at end of each cable. Refer to the following color code diagram:

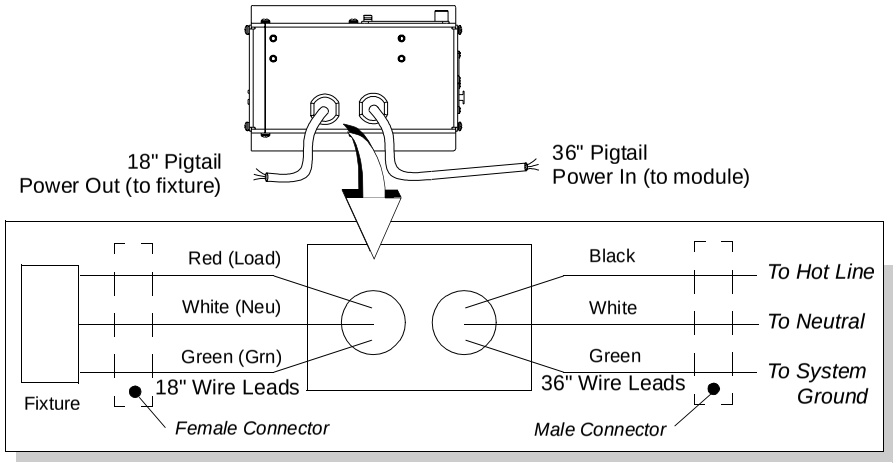

⚠ **CAUTION:** ***DO NOT*** *power module from a dimmed source. Connect to standard power or mechanical relay ONLY.*

Connect the 18" pigtail to the fixture and the 36" pigtail to the system power source. (The Bak Pak module will power up when the system power source is applied.)

Bak Pak is rated to control any dimmable load - incandescent, fluorescent, or general inductive (Forward Phase Control [FPC] only).

Connecting Data

The Bak Pak module supports standard USITT DMX512/1990 protocol. Connect data cabling as follows:

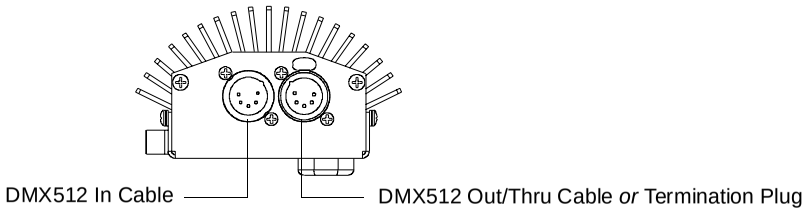

A termination plug (ET Part No. IPSDMXT) is required at the last module in the data link.

Setting Mode and Address

Bak Pak operating parameters, such as input/output modes and DMX512/Raceway addresses, can be easily configured to meet your requirements using the DIP switches located inside the recess panel. The standard DIP switch configures input/output modes, while the three rotary switches configure address and effects settings by providing three numerical dials: 100's, 10's and 1's digits respectively.

For example, to set a DMX512 address (slot) of 352, you would set the 100's dial to "3", the 10's dial to "5", and the 1's dial to "2". To configure the input/output modes, set each of the four standard DIP switches to either the ON or OFF setting. This toggles between two presets such as Non-Dim or Dim.

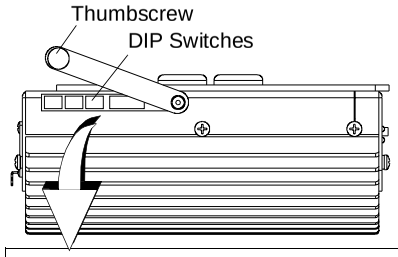

Accessing DIP Switches

Step 1. At side of module, locate recess panel.

Step 2. Loosen thumbscrew and rotate cover.

Step 3. Using #0 (small) flat head screwdriver, set switches as required. Refer to diagram below.

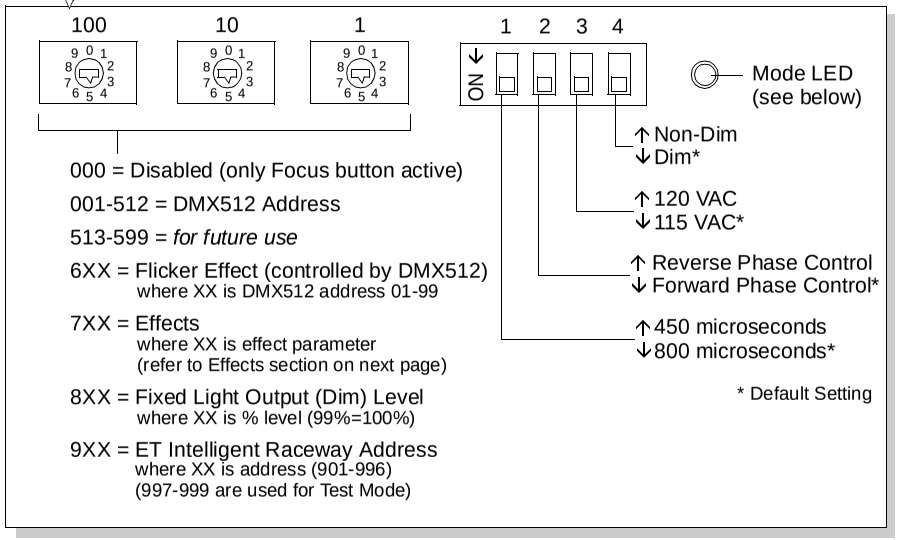

The **Mode LED,** located next to the DIP switch, indicates the following conditions:

LED Flashing Status	Condition
Rapid blink	Invalid address setting
One blink On - delay	Valid DMX512 address
Two blinks On - delay	Valid DMX512 address and receiving DMX 512
Slow blink	Effects address setting
One blink Off - delay	Valid Intelligent Raceway address
Two blinks Off - delay	Valid Intelligent Raceway address and receiving Intelligent Raceway